Round 1 - Thursday, May 12, 2022

SHOTLINK

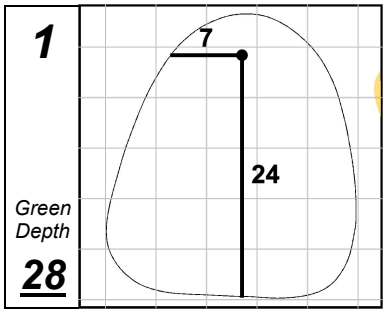

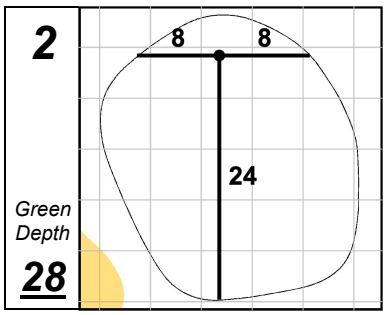

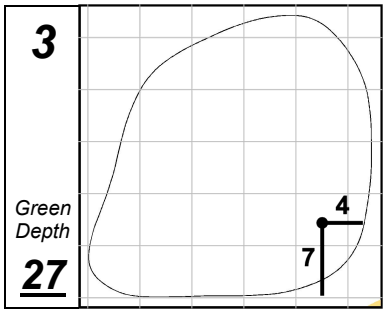

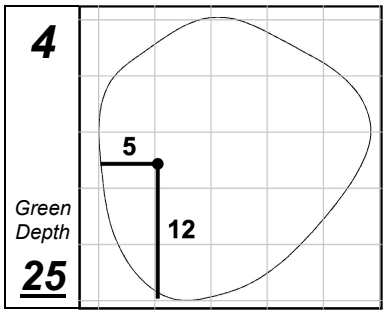

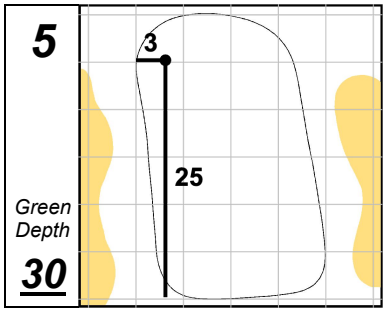

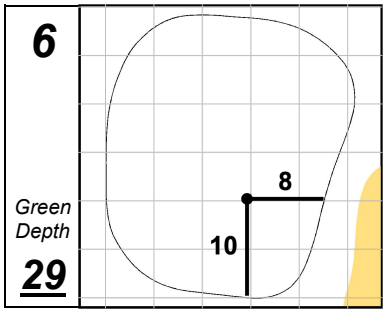

Visit Knoxville Open

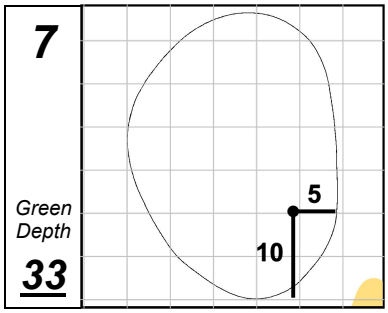

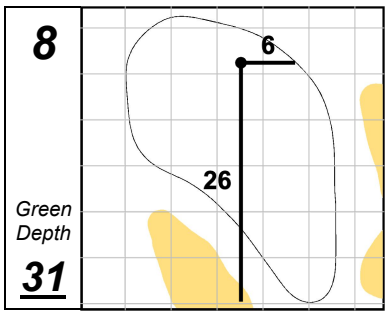

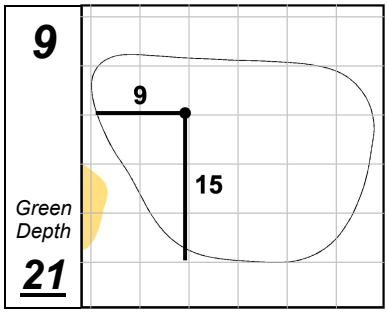

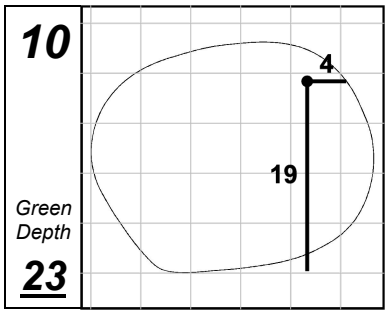

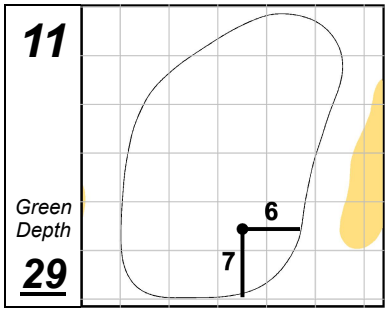

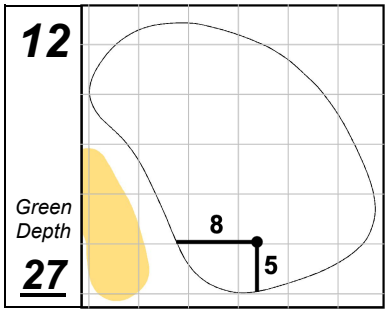

Holston Hills CC

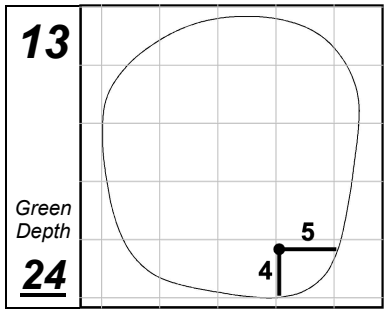

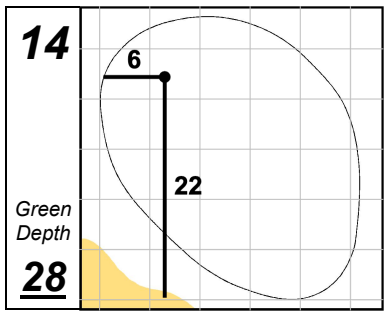

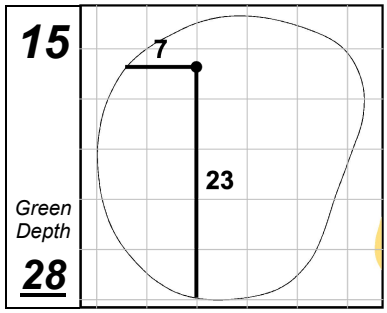

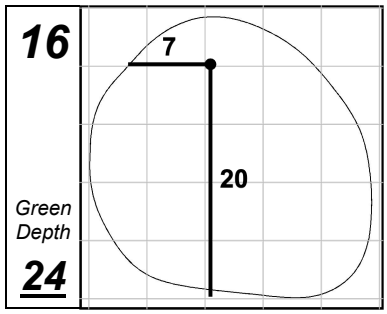

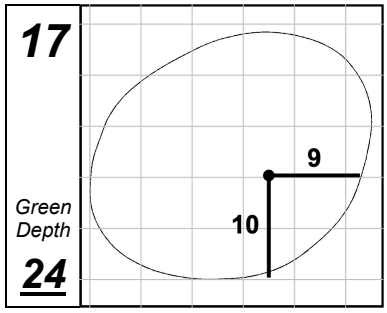

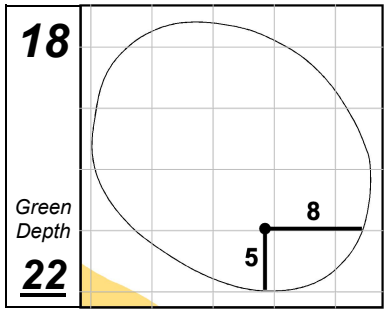

Each side of a complete square on the green represents 5 YARDS.

Wednesday, May 11, 2022 2:07:12 PM